INNOTECH
ENGINEERING DEVICES PRIVATE LIMITED

OEM MANUFACTURER OF
TESTING MACHINES &
LABORATORY EQUIPMENT

Bhiwadi, Rajasthan
(India)

Digital Automatic Rockwell Hardness Tester

with Dolphin Nose

Load cell based, closed-loop hardness testing machine for metallic materials and heat-treated components.

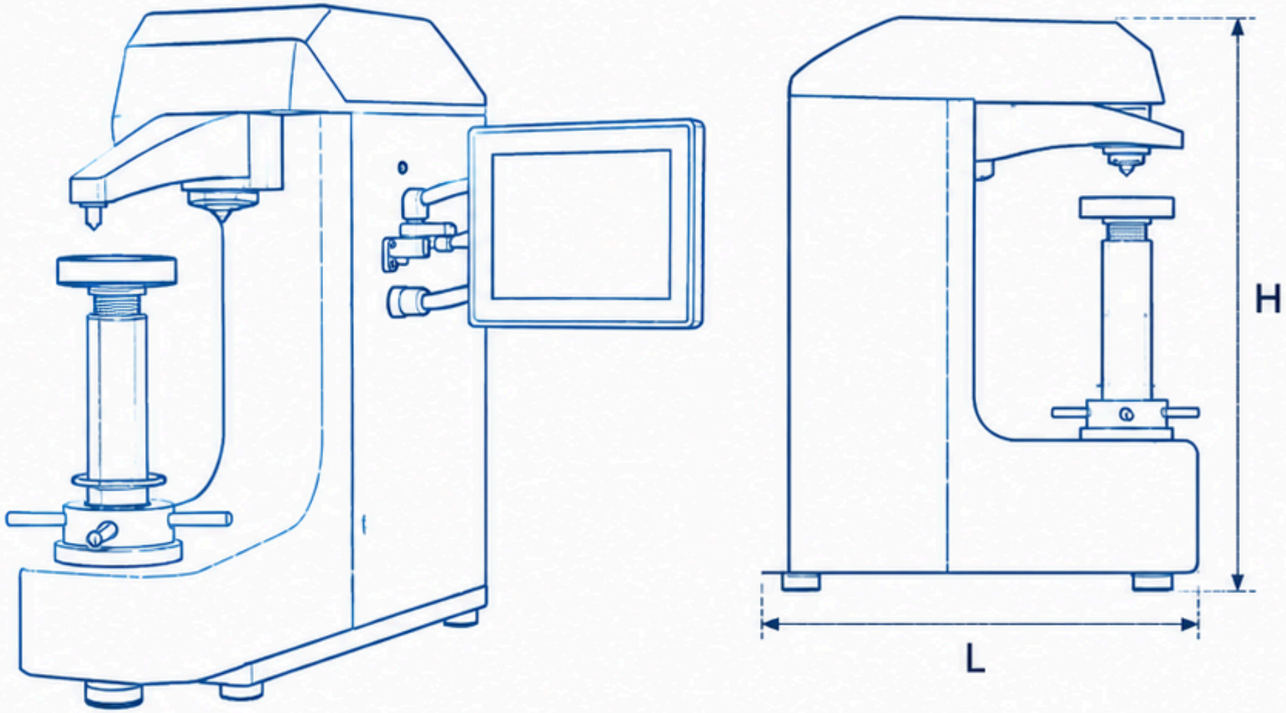

Key Technical Specifications

Load Range **3 – 150 kgf**	Resolution **0.01 Rockwell Unit**
Rockwell Scales **A, B, C, N; HR15Y**	Dwell Time **2 – 50 Seconds**

***Customized** as per Customer Requirement*

www.innotechgroup.net | info@innotechgroup.net | +91 9810431604