INNOTECH
ENGINEERING DEVICES PRIVATE LIMITED

Material Testing Equipment for
Construction & Civil Engineering Laboratories

Tensile Splitting Strength Testing Machine

1 – 2 Hp, 420 V, 3 Phase

Digital | Automatic | Laboratory Application

A robust and precise testing machine designed to determine the splitting tensile (indirect tensile) strength of concrete and other construction materials using cylindrical, cubic or customized specimens.



Key Features

- 100 kN rated testing capacity
- LED digital load display
- Digital & automatic control
- Adjustable test speed (0.5 – 5 mm/min)
- Automatic data recording (RS232/USB)
- Safety interlock for secure operation

Technical Specifications

Capacity	100 kN
Measuring Range	0 – 100 kN
Resolution	0.01 kN
Test Speed	0.5 – 5 mm/min (Adjustable)
Test Stroke	Up to 50 mm
Motor Power	1 – 2 Hp
Power Supply	420 V, 3 Phase, 50 Hz

Applications

- Concrete material testing
- Concrete mix evaluation
- Construction material R&D
- Cylindrical & cubic specimen testing
- Civil engineering laboratories
- Academic & research institutes
- Quality control in construction
- Customized material testing

Dimensional Drawing (Typical)

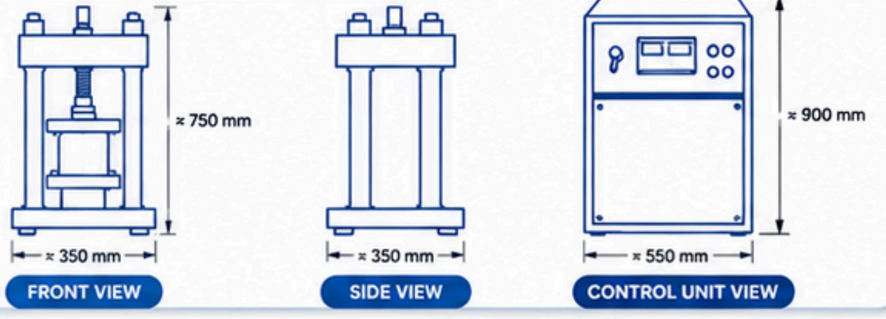

Benefits

- Accurate & reliable splitting tensile results
- Evaluates tensile strength of concrete indirectly
- Supports quality control & material comparison
- Digital operation with easy data management
- Robust, laboratory-grade construction

Applicable Standards

IS 5816
(Splitting Tensile Strength of Concrete)

ASTM C496 / C496M
(Splitting Tensile Strength of Cylindrical Concrete Specimens)

EN 12390-6
(Tensile Splitting Strength of Hardened Concrete)

+91 9810431604 | info@innotechgroup.net | www.innotechgroup.net | H-307, RIICO Industrial Area, Karoli, Tapukara, Bhiwadi – 301707, Rajasthan, India