INNOTECH ENGINEERING DEVICES PRIVATE LIMITED

COLOUR MATCHING CABINET

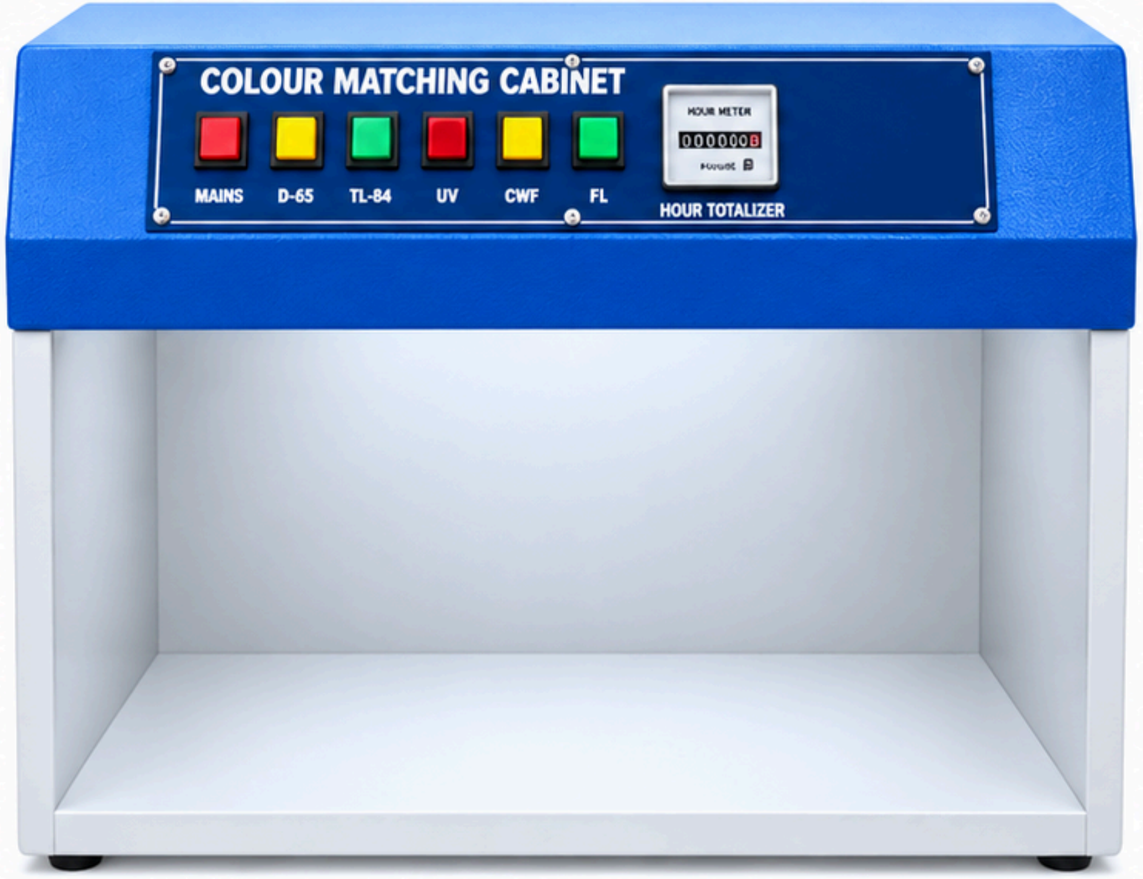

TECHNICAL DRAWING (BLUEPRINT)

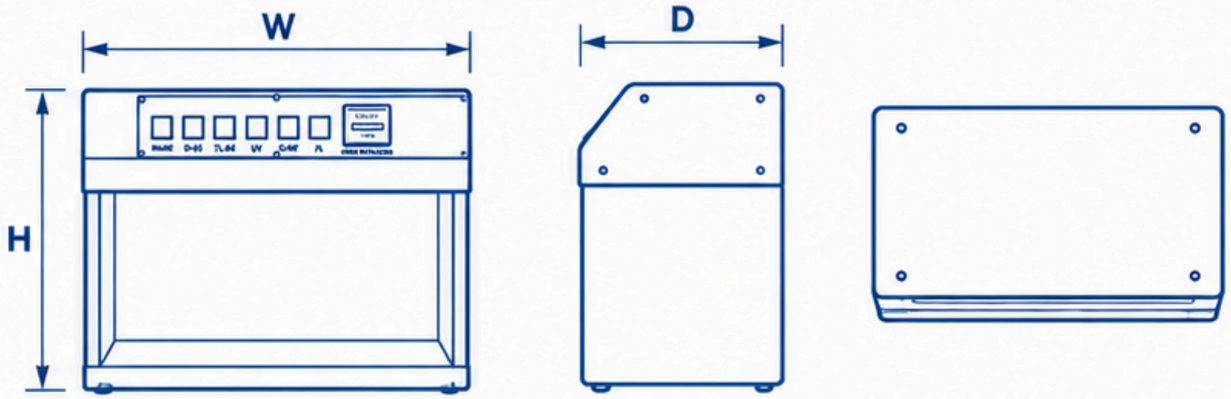

MAJOR TECHNICAL SPECIFICATIONS

Illuminants	D-65, TL-84, UV, CWF, FL
Hour Meter	Digital Heur Totalizer
Viewing Area	As per requirement
Power Supply	230 V AC, 50/60 Hz

We Customize Machine as per Customer Specification.

www.innotechgroup.net | info@innotechgroup.net | +91 9810431604 | Bhiwadi, Rajasthan, India